# DATA SHEET

## Single Phase Induction Motor - Squirrel Cage

Customer :

Product line : Farm Duty Single-Phase

Product code : 12058469
Catalog # : FD000104C

| | | | |
|---|---|---|---|
| Frame | : D56C | Locked rotor time | : 10s (cold) 6s (hot) |
| Output | : 1 HP (0.75 kW) | Temperature rise | : 80 K |
| Poles | : 4 | Duty cycle | : Cont.(S1) |
| Frequency | : 60 Hz | Ambient temperature | : -20°C to +40°C |
| Rated voltage | : 115/230 V | Altitude | : 1000 m.a.s.l. |
| Rated current | : 14.0/7.00 A | Protection degree | : IP55 |
| L. R. Amperes | : 91.0/45.5 A | Cooling method | : IC411 - TEFC |
| LRC | : 6.5x(Code M) | Mounting | : F-1 |
| No load current | : 11.5/5.75 A | Rotation¹ | : Both (CW and CCW) |
| Rated speed | : 1750 rpm | Noise level² | : 55.0 dB(A) |
| Slip | : 2.78 % | Starting method | : Direct On Line |
| Rated torque | : 3.00 ft.lb | Approx. weight³ | : 36.6 lb |
| Locked rotor torque | : 320 % | | |
| Breakdown torque | : 270 % | | |
| Insulation class | : B | | |
| Service factor | : 1.15 | | |
| Moment of inertia (J) | : 0.1338 sq.ft.lb | | |

| Output | 50% | 75% | 100% |
|---|---|---|---|
| Efficiency (%) | 60.0 | 67.0 | 70.3 |
| Power Factor | 0.45 | 0.56 | 0.65 |

Foundation loads

| | |
|---|---|
| Max. traction | : 60 lb |
| Max. compression | : 97 lb |

| | | Drive end | Non drive end |
|---|---|---|---|
| Bearing type | : | 6204 ZZ | 6202 ZZ |
| Sealing | : | V'Ring | V'Ring |
| Lubrication interval | : | - | - |
| Lubricant amount | : | - | - |
| Lubricant type | : | Mobil Polyrex EM | |

Notes

This revision replaces and cancel the previous one, which must be eliminated.
(1) Looking the motor from the shaft end.
(2) Measured at 1m and with tolerance of +3dB(A).
(3) Approximate weight subject to changes after manufacturing process.
(4) At 100% of full load.

These are average values based on tests with sinusoidal power supply, subject to the tolerances stipulated in NEMA MG-1.

| Rev. | Changes Summary | Performed | Checked | Date |
|---|---|---|---|---|
| | | | | |

| | | | | |
|---|---|---|---|---|
| Performed by | | | | |
| Checked by | | | Page | Revision |
| Date | 13/11/2020 | | 1 / 2 | |

This document is exclusive property of WEG S/A. Reprinting is not allowed without written authorization of WEG S/A.
Subject to change without notice

# LOAD PERFORMANCE CURVE

## Single Phase Induction Motor - Squirrel Cage

| | | | |
|---|---|---|---|
| Customer | : | | |
| Product line | : Farm Duty Single-Phase | Product code : | 12058469 |
| | | Catalog # : | FD000104C |

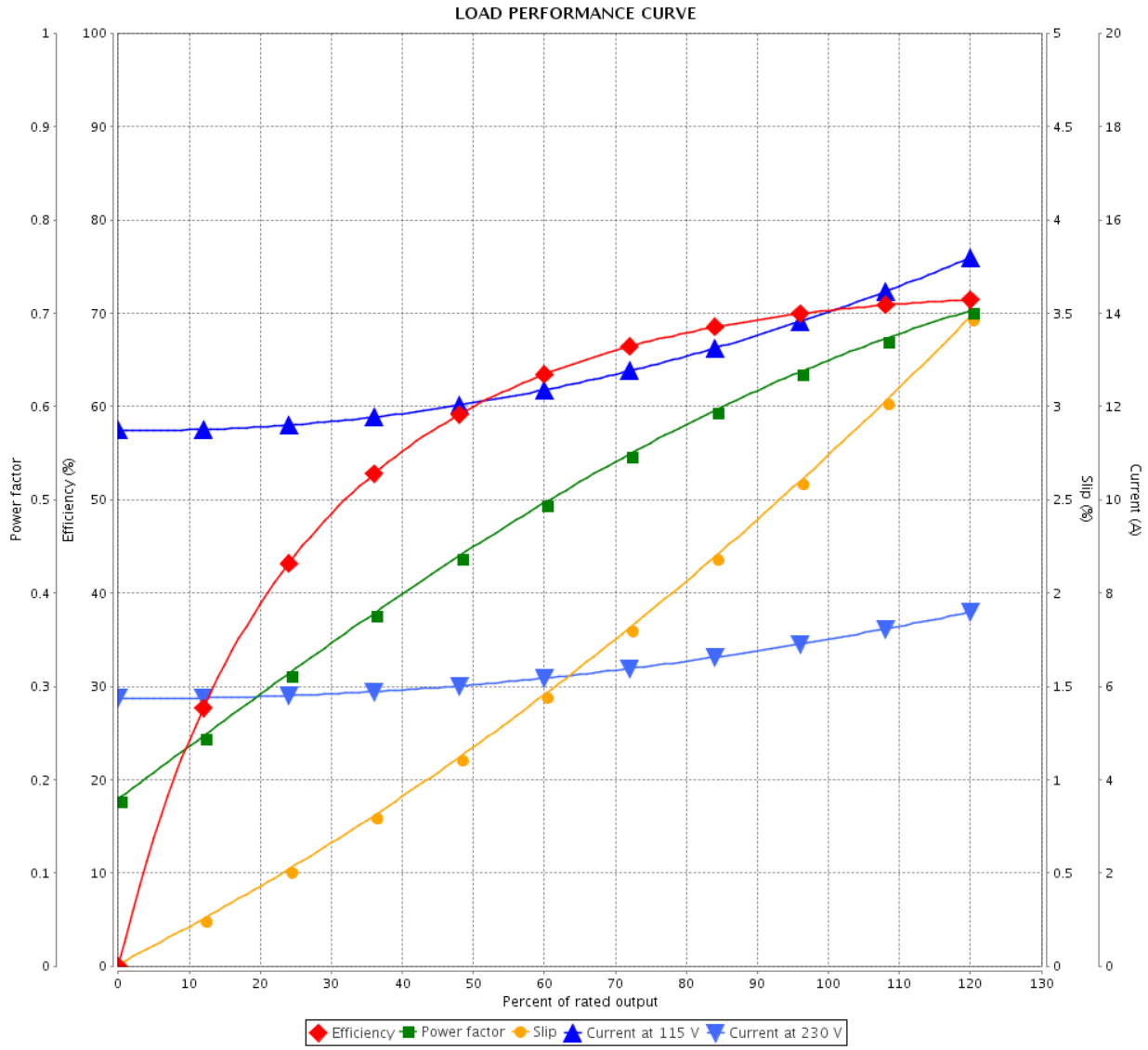


| | | | |
|---|---|---|---|
| Performance | : 115/230 V 60 Hz 4P | | |
| Rated current | : 14.0/7.00 A | Moment of inertia (J) | : 0.1338 sq.ft.lb |
| LRC | : 6.5 | Duty cycle | : Cont.(S1) |
| Rated torque | : 3.00 ft.lb | Insulation class | : B |
| Locked rotor torque | : 320 % | Service factor | : 1.15 |
| Breakdown torque | : 270 % | Temperature rise | : 80 K |
| Rated speed | : 1750 rpm | | |

| Rev. | Changes Summary | Performed | Checked | Date |
|---|---|---|---|---|
| | | | | |

| | | | | |
|---|---|---|---|---|
| Performed by | | | | |
| Checked by | | | Page | Revision |
| Date | 13/11/2020 | | 2 / 2 | |

This document is exclusive property of WEG S/A. Reprinting is not allowed without written authorization of WEG S/A.
Subject to change without notice

No reproduction of this drawing is allowed written permission of WEG Motores

| EIXO | |
|---|---|
| PADRÃO | X |
| OPCIONAL | |
| ESPECIAL | |

Dimensões em polegada
Dimensions in inches

THIS IS AN UPDATED REVISION, THE PREVIOUS ONE MUST BE DISREGARDED.

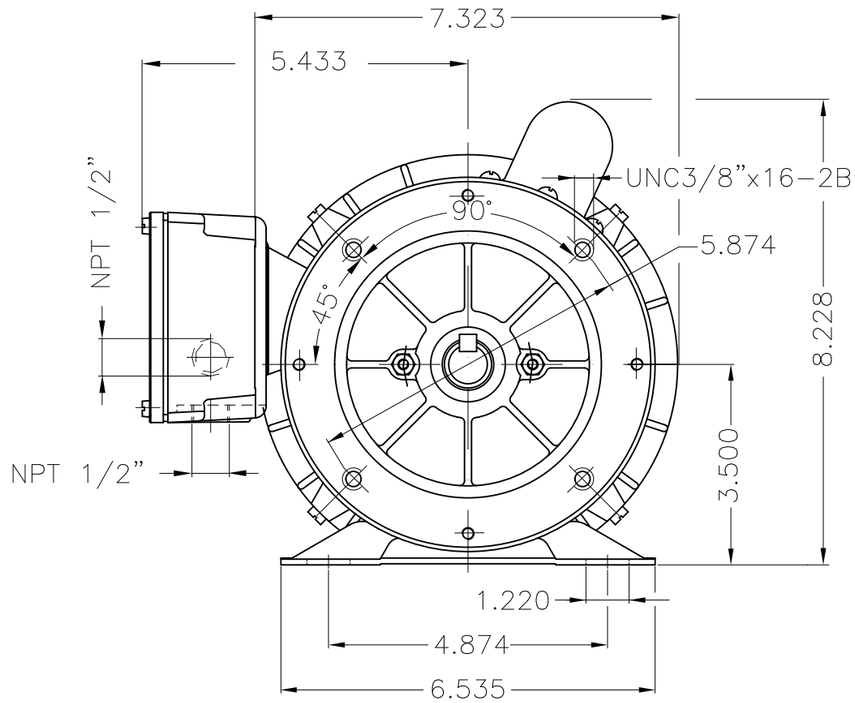


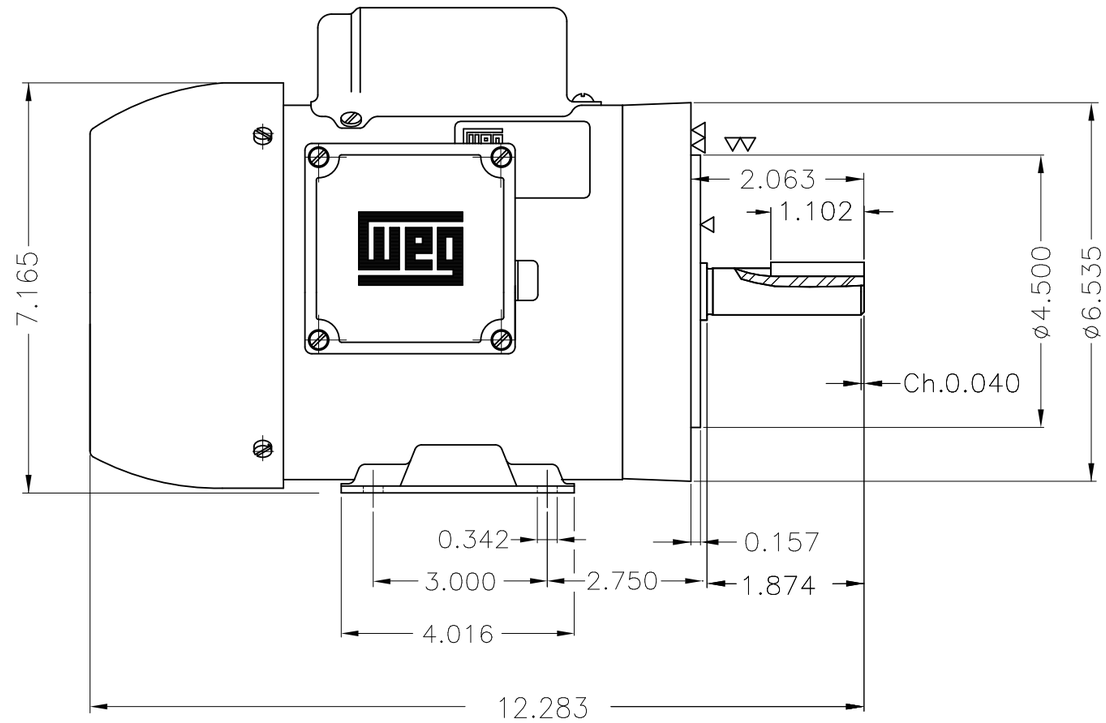


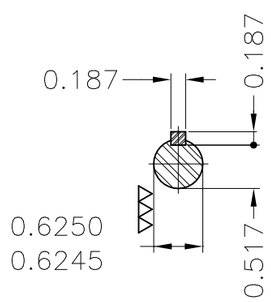


Rotation CW and CCW
Mounting B34R(D)

| ECM | LOC | SUMMARY OF MODIFICATIONS | EXECUTED | CHECKED | RELEASED | DATE | VER |
|---|---|---|---|---|---|---|---|

| | | | |
|---|---|---|---|
| EXECUTED | USERADMIN | SINGLE PHASE MOTOR FARM DUTY | |
| CHECKED | | FRAME D56C IP55 TEFC | |
| RELEASED | | WEG code: 12058469 | |
| REL DT | 13.11.2020 | WMO Jaragua do Sul Product Engineering | SHEET 1 / 1 |

1 HP 04 Poles 60Hz

A

A3

ZME

WEG's property. Forbidden reproduction without previous authorization.